+15kV ESD Protected、2Mbps Data Rate

RS-485 SSP485

General Description

The SSP485 is a half-duplex high speed transceiver for RS-485 and RS422 communication. IC contains one driver and one receiver.

The SSP485 has a fail-safe circuit. Each driver output and receiver input is protected against ±15kV electrostatic discharge (HBM) (ESD)shocks.

The SSP485 receiver has 1/8 unit load input impedance, allows up to 256 devices can be attached to the bus. Mainly used in RS-485/RS-422 communication system.

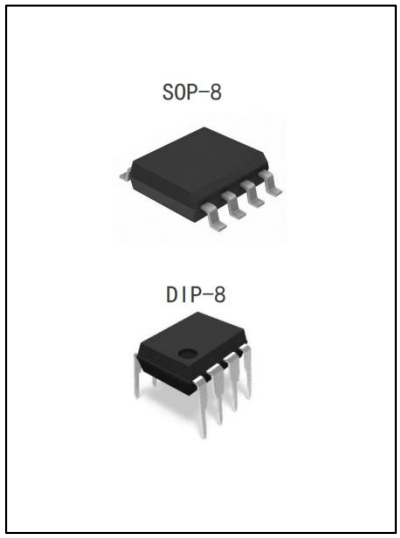

Features

- I/O pin ESD protection：+15kV HBM
  Other pins have level 3 ESD protection：>+8kV HBM
- Fractional unit load allows up to 256 devices on the bus
- + 5V operating voltage (For + 3.3v power supply, recommend the maximum transmission rate is 500Kbps)
- Data transmission up to 2Mbps
- Low current shutdown mode operating current：1nA
- Current limiting and thermal turn-off function can be used for driver overload protection
- SOP8 and DIP8 package

Applications

- Intelligent instrument
- Industrial process control
- Building automation network
- Motor control
- EMI sensitive transceiver application

Order specification

Part No	Package	Manner of Packing	Devices per bag/reel
SSP485	SOP8	Reel	4000

Block Diagram and Pin Arrangement Diagram

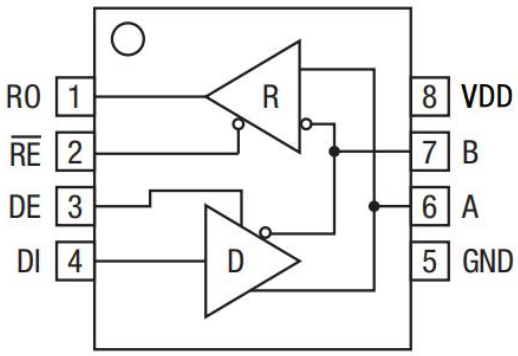

Pin Assignment

Pin No.	Pin Name	Description	I/O
1	RO	Receiver output： If A-B≥-0.05V，RO will be high； If A-B≤-0.2V，RO will be low； If A and B are open or shorted，RO will be high.	O
2	$\overline{RE}$	Receiver output enable： RO is enabled when $\overline{RE}$ is low； RO is high impedance when $\overline{RE}$ is high.	I
3	DE	Driver output enable： The driver outputs，A and B are enabled by bringing DE high. They are high impedance when DE is low.	I
4	DI	Driver input： A low on DI forces output A low and output B high. Similarly, a high on DI forces output A high and output B low.	I
5	GND	Ground	
6	A	Receiver input and driver output	I/O
7	B	Receiver input and driver output	I/O
8	VDD	Supply voltage	

Functional Description

The SSP485 is a half-duplex high speed transceiver for RS-485 and RS422 communication. IC contains one driver and one receiver.The SSP485 receiver has 1/8 unit load input impedance, allows up to 256 devices can be attached to the bus.

Receiver Truth Table

Input			Output
$\overline{RE}$	DE	A - B	RO
L	X	⩾-0.05V	H
L	X	⩽-0.2V	L
L	X	Open/shorted	H
H	H	X	Z
H	L	X	Z

Driver Truth Table

Input			Output	
$\overline{RE}$	DE	DI	B	A
X	H	H	L	H
X	H	L	H	L
L	L	X	Z	Z
H	L	X	Z	

Absolute Maximum Ratings

Unless specified otherwise, Tamb= 25℃

Parameter	Symbol	Value	Unit
Supply Voltage	V_{DD}	-0.3~7	V
Input / Output Voltage	V_{IN}/V_{OUT}	GND-0.3~V_{DD}+0.3	V
A/B Input / Output Voltage	$V_{INA/B}/V_{OUTA/B}$	-13~13	V
Operating Temperature	T_{amb}	-40~85	℃
Storage Temperature	T	-65~150	℃

DC Electrical Characteristics

Unless specified otherwise，VDD=5V±5%，Tamb= 25℃

Parameter	Symbol	Test Conditions		Min	Typ	Max	Unit
Driver							
Differential driver output	V_{OD1}	No load				5	V
Differential driver output	V_{OD2}	R=50Ω（RS-422）(1)		2.0			V
		R=27Ω（RS-485）(1)		1.5			V
Change in magnitude of driver differential output voltage for complementary output states	ΔV_{OD}	R=50Ω or 27Ω(1)			0.01	0.2	V
Driver common-mode output voltage	V_{OC}	R=50Ω or 27Ω(1)				3	V
Change in magnitude of driver common-mode output voltage for complementary output states	ΔV_{OC}	R=50Ω or 27Ω(1)			0.01	0.2	V
Input high voltage	V_{IH1}	DE、$\overline{RE}$、DI		2.0			V
Input low voltage	V_{IL1}	DE、$\overline{RE}$、DI				0.8	V
Input current	I_{IN1}	DE、$\overline{RE}$、DI		-2		2	μA
Input current (A, B)	I_{IN2}	DE=GND，V_{DD} =GND or 5.25V	Vin=12V			125	μA
			Vin=-7V			-75	μA
Driver short-circuit current	I_{OD1}	-7V≤V_{OUT}≤V_{DD}		-250			mA
		0V≤V_{OUT}≤12V				250	mA
		0V≤V_{OUT}≤V_{DD}		±25			mA
Receiver							
Differential threshold voltage	V_{TH}	-7V≤V_{CM}≤12V		-200	-125	-50	mV
input hysteresis voltage	ΔV_{TH}				25		mV
output high voltage	V_{OH}	I_O=-4mA，V_{ID}=-50mV		3.5			V
output low voltage	V_{OL}	I_O=4mA，V_{ID}=-200mV				0.4	V
3-state(high impedance) output current at receiver	I_{OZR}	0.4V≤V_O≤2.4V				±1	μA
input resistance	R_{IN}	-7V≤V_{CM}≤12V		96			kΩ
Receiver short-circuit current	I_{OSR}	0V≤V_{RO}≤V_{DD}		±7		±95	mA

Supply Current	I_{CC}	No load，$\overline{RE}$=DI =GND or V_{DD}	DE=V_{DD}		450	900	μA
			DE=GND		450	600	μA
Supply Current in Shutdown	I_{SHDN}	DE=GND，$\overline{RE}$=V_{DD}				10	μA
ESD Protection（A/B）	ESD	Human Body Model			±15		kV

Transmission characteristics

Unless specified otherwise，VDD=5V±5%，Tamb= 25℃

Parameter	Symbol	Test Conditions	Min.	Typ.	Max.	Unit
Driver Input to Output	t_{DPLH}	R_{DIFF}=54Ω，C_{L1}=C_{L2}=100pF(2)		34	60	ns
Driver Input to Output	t_{DPHL}	R_{DIFF}=54Ω，C_{L1}=C_{L2}=100pF(2)		34	60	ns
$\lvert t_{DPLH}-t_{DPHL}\rvert$	t_{DSKEW}	R_{DIFF}=54Ω，CL1=CL2=100pF(2)		-2.5	±10	ns
Driver Rise or Fall Time	t_{DR},t_{DF}	R_{DIFF}=54Ω，C_{L1}=C_{L2}=100pF(2)		14	25	ns
Maximum Data Rate	f_{MAX}			2		Mbps
Driver Enable to Output High	t_{DZH}	C_L=100pF，S2 closed(3)			150	ns
Driver Enable to Output Low	t_{DZL}	C_L=100pF，S1 closed(3)			150	ns
Driver Disable Time from Low	t_{DLZ}	C_L=15pF，S1 closed(3)			100	ns
Driver Disable Time from Low	t_{DHZ}	C_L=15pF，S2 closed(3)			100	ns
Receiver Input to Output	t_{RPLH}	$\lvert V_{ID}\rvert$≥2.0V Rise or Fall Time≤15ns(4)		106	150	ns
Receiver Input to Output	t_{RPHL}			106	150	ns
$\lvert t_{RPLH}-t_{RPHL}\rvert$	t_{RSKD}	$\lvert V_{ID}\rvert$≥2.0V Rise or Fall Time≤15ns(4)		0	±10	ns
Receiver Enable to Output Low	t_{RZL}	C_L=100pF，S1 closed(5)		20	50	ns
Receiver Enable to Output High	t_{RZH}	C_L=100pF，S2 closed(5)		20	50	ns
Receiver Disable Time from Low	t_{RLZ}	C_L=100pF，S1 closed(5)		20	50	ns

Receiver Disable Time from High	t_{RHZ}	C_L=100pF，S2 closed(5)		20	50	ns
Time to Shutdown	t_{SHDN}		50	200	600	ns
Driver Enable from Shutdown to Output High	$t_{DZH(SHDN)}$	C_L=15pF，S2 closed(3)			250	ns
Driver Enable from Shutdown to Output Low	$t_{DZL(SHDN)}$	C_L=15pF，S1 closed(3)			250	ns
Receiver Enable from Shutdown to Output High	$t_{RZH(SHDN)}$	C_L=100pF，S2 closed(3)			3500	ns
Receiver Enable from Shutdown to Output Low	$t_{RZL(SHDN)}$	C_L=100pF，S1 closed(3)			3500	ns

Note：

(1) Test circuit is shown in Figure 1

(2) Test circuit is shown in Figure 2

(3) Test circuit is shown in Figure 3

(4) Test circuit is shown in Figure 4

(5) Test circuit is shown in Figure 5

Test Circuit

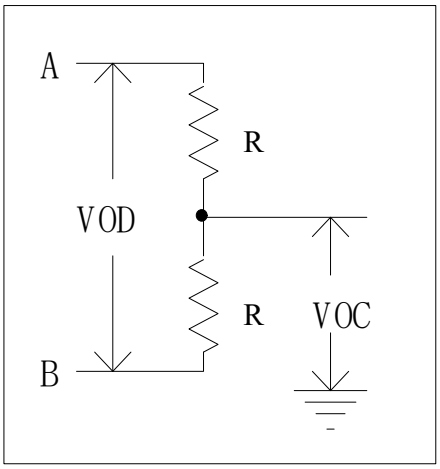

Figure 1 Driver DC Test Circuit

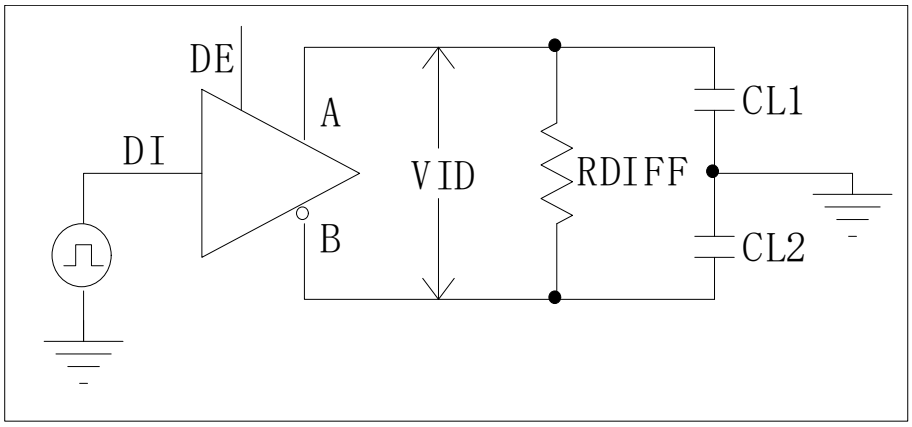

Figure 2 Driver Timing Test Circuit

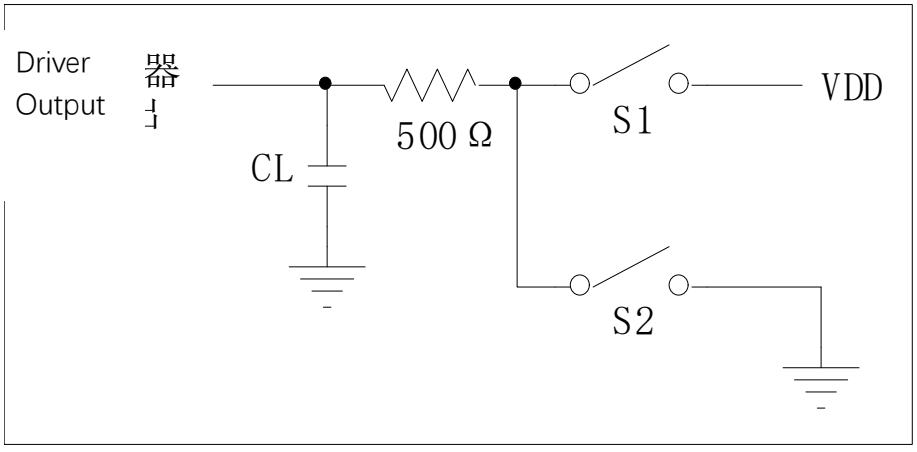

Figure 3 Driver Enable/Invalid Timing Test Circuit

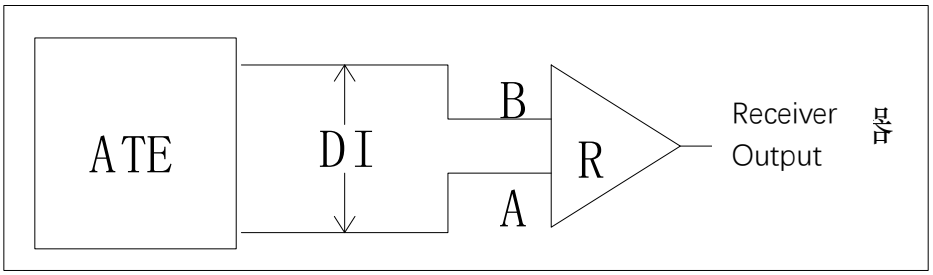

Figure 4 Receiver Propagation Delay Test Circuit

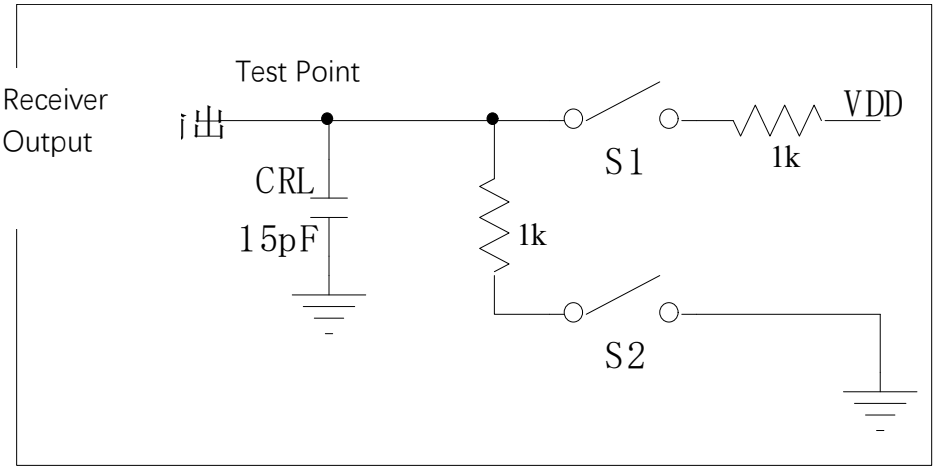

Figure 5 Receiver Enable/Invalid Timing Test Circuit

Application Circuits

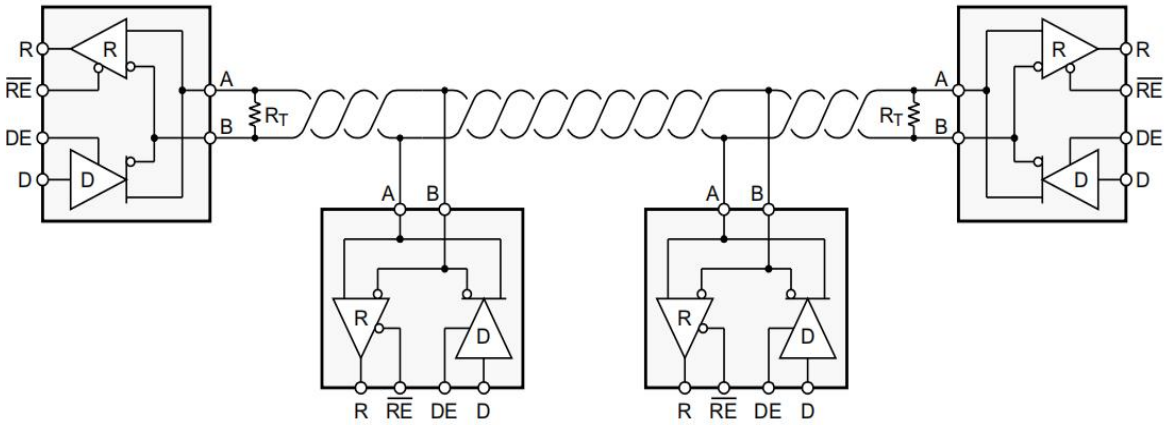

Figure 6 Typical Application Chart

Transceivers are designed for bidirectional data communication over multi-point bus transmission lines. Figure 6 shows a typical network application circuit. These devices can also be used as linear transponders with cable lengths up to 4000 ft. In order to reduce reflection, terminals should be matched with their characteristic impedance at both ends of the transmission line, and the length of the branch line outside the

main line should be as short as possible.

Package Information（SOP8）

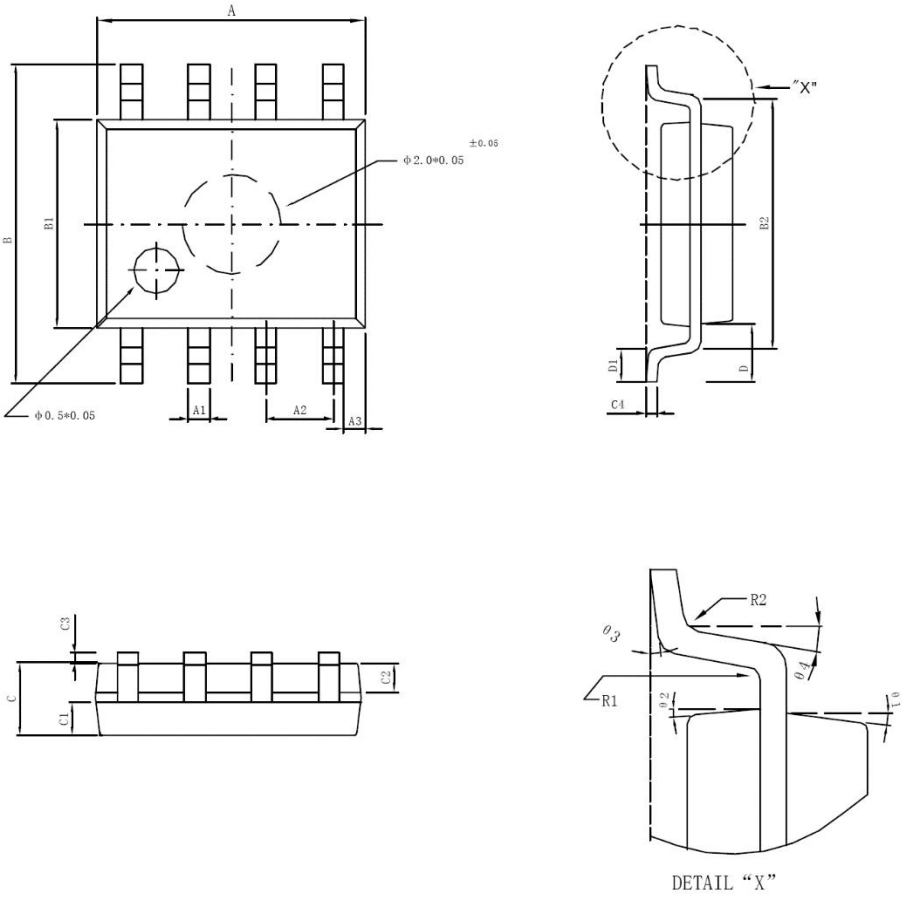

Symbol	Min.（mm）	Max.（mm）	Symbol	Min.（mm）	Max.（mm）
A	4.95	5.15	**C3**	0.10	0.20
A1	0.37	0.47	**C4**	0.20TYP	
A2	1.27TYP		**D**	1.05TYP	
A3	0.41TYP		**D1**	0.50TYP	
B	5.80	6.20	**R1**	0.07TYP	
B1	3.80	4.00	**R2**	0.07TYP	
B2	5.0TYP		**θ1**	17°TYP	
C	1.30	1.50	**θ2**	13°TYP	
C1	0.55	0.65	**θ3**	4°TYP	
C2	0.55	0.65	**θ4**	12°TYP	

Package Information（DIP8）

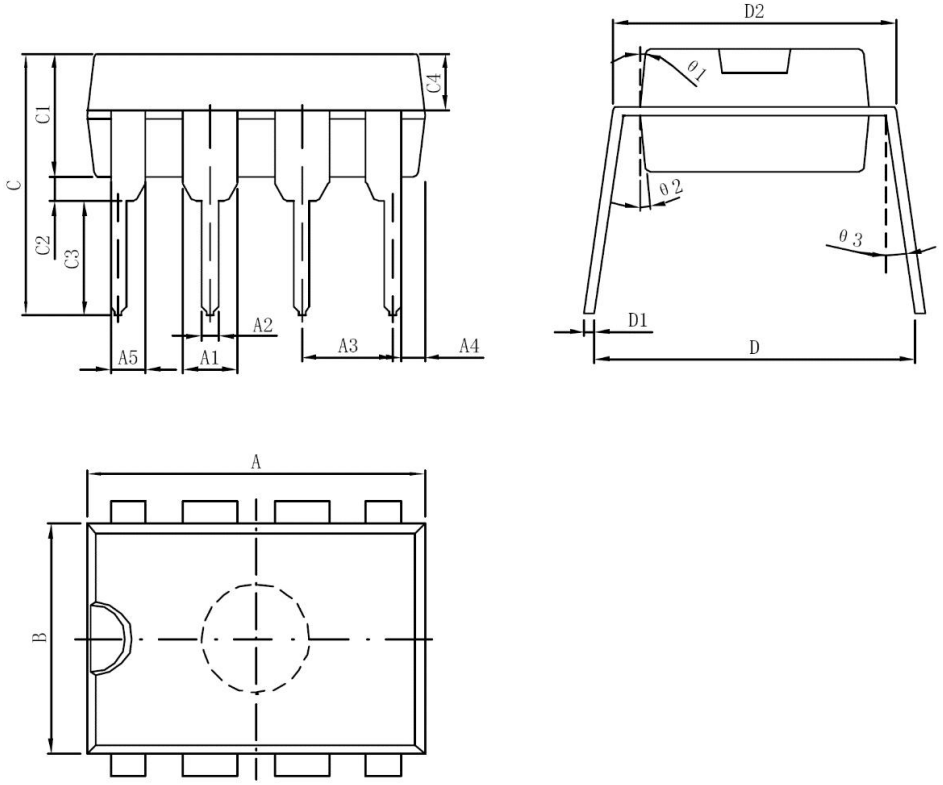

Symbol	Min.（mm）	Max.（mm）	Symbol	Min.（mm）	Max.（mm）
A	9.30	9.50	**C2**	0.50	
A1	1.524		**C3**	3.3	
A2	0.39	0.53	**C4**	1.57TYP	
A3	2.54		**D**	8.20	8.80
A4	0.66TYP		**D1**	0.20	0.35
A5	0.99TYP		**D2**	7.62	7.87
B	6.3	6.5	**θ1**	8°TYP	
C	7.20		**θ2**	8°TYP	
C1	3.30	3.50	**θ3**	5°TYP	

Special Instructions

The company reserves the right of final interpretation of this specification.

Version Change Description

Version：V1.6	Author：Yangyang	Time：2021.8.12
Modify the record：		
1. Re-typesetting the manual and checking some data		
Version：V1.7	Author：Yangyang	Time：2022.10.13
Modify the record：		
1. Deleting the description and parameters of slew-rate-limited		
Version：V1.8	Author：Yangyang	Time：2026.6.2
Modify the record：		
1. Updating and modifying the Order Specification		

Statement

The information in the usage specification is correct at the time of publication, Shanghai Siproin Microelectronics Co.,Ltd. has the right to change and interpret the specification, and reserves the right to modify the product without prior notice. Users can obtain the latest version information from our official website or other effective channels before confirmation, and verify whether the relevant information is complete and up to date.

With any semiconductor product, there is a certain possibility of failure or failure under certain conditions. The buyer is responsible for complying with safety standards and taking safety measures when using the product for system design and complete machine manufacturing. The product is not authorized to be used as a critical component in life-saving or life-sustaining products or systems, in order to avoid potential failure risks that may cause personal injury or property loss.