1.5A 40V Bipolar Linear Regulator

LM317

General Description

The LM317 device is an adjustable three-terminal positive-voltage regulator capable of supplying more than 1.5A over an output-voltage range of 1.25V to 37V. LM317 features a very low standby current 1.5mA .LM317 is available in SOT-223, TO-252, TO263-2, TO-220 and SOT89-3 package.

SOT-223

TO-252

TO-263-2

TO-220

SOT89-3

Features

- Output current greater than 1.5A
- Range Output voltage range adjustable from 1.25V to 37V
- Internal Thermal Overload Protection
- Output Transistor Safe−Area Compensation

Applications

- Power Management for Computer Mother Board, Graphic Card
- LCD Monitor and LCD TV
- DVD Decode Board
- ADSL Modem
- Post Regulators for Switching Supplies

Order information

Product model	Package	Manner of packing	Minimum packing quantity
LM317	SOT-223	Reel	2500
LM317T	TO-220	Tube	50
LM317M	TO-252	Reel	2500
LM317D	TO-263-2	Reel	2500
LM317L	SOT89-3	Reel	1000

Block Diagram

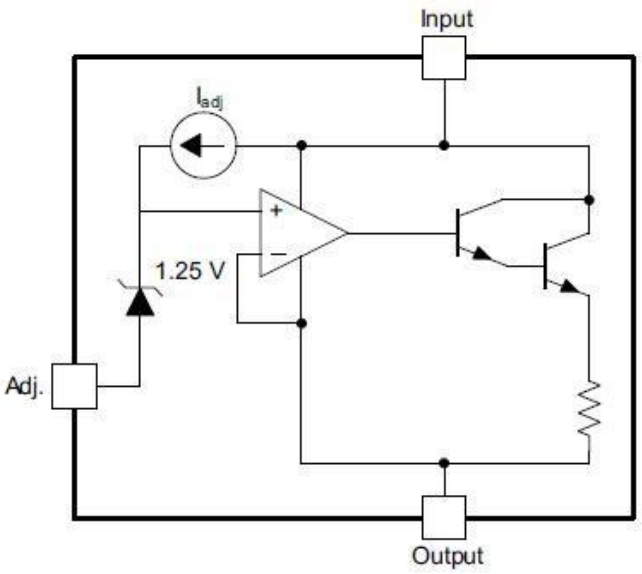

Pin Configuration

SOT223 Top View TO220 Top View TO252 Top View TO263-2 Top View SOT89-3 Top View

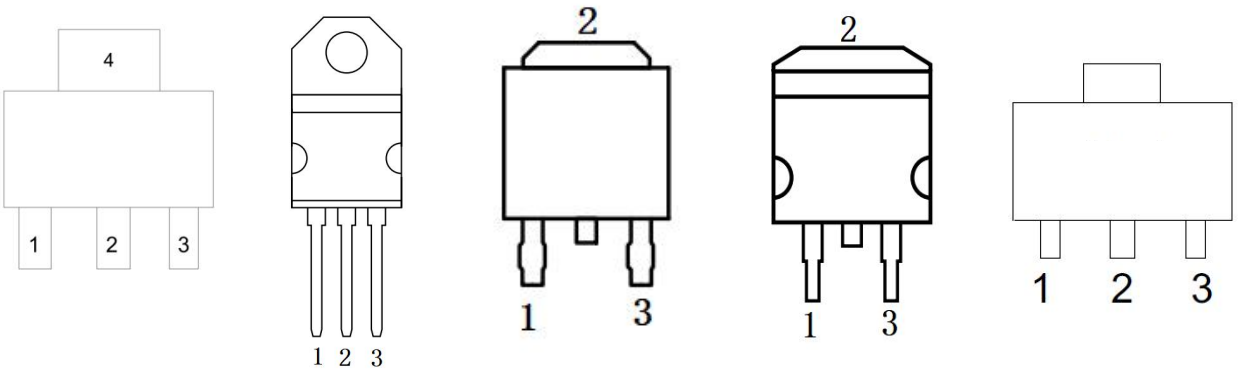

PIN						IO	FUNCTION
NAME	SOT223	TO220	TO252	TO263-2	SOT89-3		
ADJ	1	1	1	1	1	I	Output voltage adjustment pin. Connect to a resistor divider to set Vout
VIN	3	3	3	3	3	I	Input voltage pin
VOUT	2,4	2	2	2	2	O	Output voltage pin

Typical Application

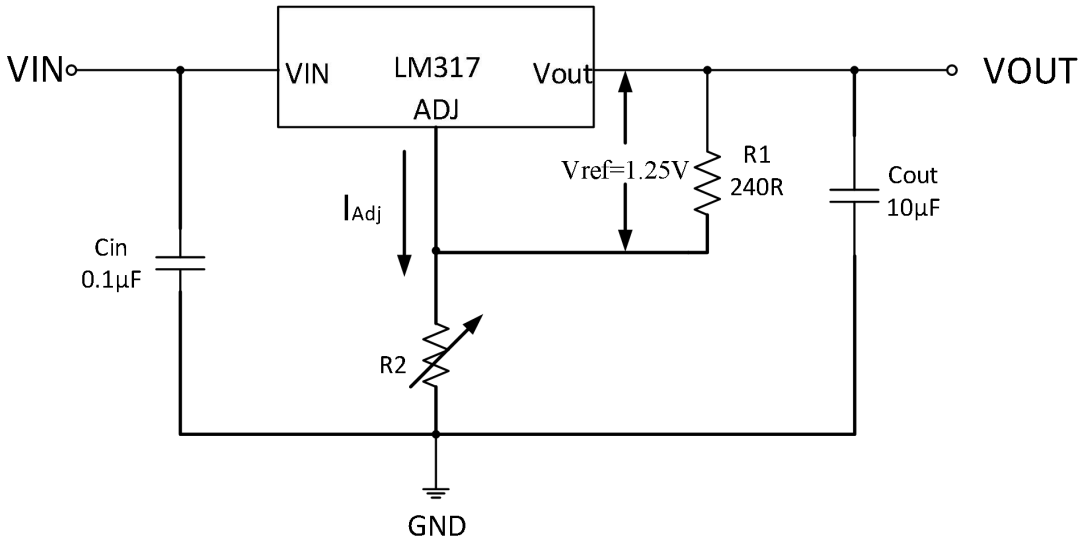

Adjustable Voltage Regulator

1. R1 and R2 are required to set the output voltage.
2. Cin is recommended, particularly if the regulator is not in close proximity to the power-supply filter capacitors. A 0.1 μF or 10μF ceramic or tantalum capacitor provides sufficient bypassing for most applications, especially when adjustment and output capacitors are used.
3. Cout improves transient response, but is not needed for stability.
4. Vout is calculated as shown: Vout = V_{REF}(1+R2/R1) + (IAdjxR2), IAdj is typically 50 μA and negligible in most applications.

Absolute Maximum Ratings

Rating	Symbol	MIN	MAX	Unit
Max Input Voltage	Vin	-	40	V
Output current	Io	0.01	1.5	A
Output voltage	VO	1.25	37	V
Input-to-output differential voltage	VI-VO	-	40	V
Power Dissipation	PD	Internal limited		
Ambient Temperature	Ta	-20	85	℃
Operating Junction Temperature Range	Tj	-55	+150	℃
Storage Temperature	Tstg	-40	+150	℃

Caution: Exceed these limits to damage to the device. Exposure to absolute maximum rating conditions may affect device reliability.

Electrical Characteristics

T_A=25°C,unless otherwise noted.

Parameter	Symbol	Test Conditions	Min	Typ	Max	Unit
Line regulation (2)	Regline	VI-VO=3V to 40V,Tj=25°C	-5	-	5	mV
Load regulation	Regload	Io=10mA to 1000mA, PD≤20W, Tj=25°C	-25	-	25	mV
Reference voltage (between pin 2 and pin 1)	Vref	VI -VO =3V to 40V, PD≤20W, IO=10mA to 1.5A	1.2	1.25	1.3	V
Output-voltage Temperature stability	TS	TJ = 0°C to 125°C	-	0.7	-	%VO
Maximum output current	Imax	VI-VO ≤ 15V,TJ=25°C	1.5	-	-	A
Adjustment Pin	IAdj		-	50	100	μA
Adjustment Pin Current Change	Δ IAdj	2.5 V ≤ VI−VO ≤ 40 V, 10 mA ≤ IL ≤ 500mA,	-	0.2	5	μA
Minimum Load Current to Maintain Regulation	ILmin	VI−VO = 40V	-	3.5	10	mA
Thermal Shutdown	-	-	-	180	-	°C
Junction to Case Thermal Resistance	RθJC		-	5	-	°C/W

(1) Unless otherwise noted, the following test conditions apply: |VI – VO| = 5 V and IOMAX = 1.5 A, TJ = 0°C to 125°C. Pulse testing techniques are used to maintain the junction temperature as close to the ambient temperature as possible.

(2) Line regulation is expressed here as the percentage change in output voltage per 1-V change at the input.

Detailed Description

LM317 device is an adjustable three-terminal positive-voltage regulator capable of supplying up to 1.5A over an output-voltage range of 1.25V to 37V. It requires only two external resistors to set the ouput voltage. The LM317 device is versatile in its applications, including uses in programmable output regulation and local on-card regulation. Or, by connecting a fixed resistor between the ADJ and OUTPUT terminals, the LM317 device can function as a precision current regulator. An optional output capacitor can be added to improve transient response.

The regulated output voltage is given by:

$$Vout = Vref(1+R2/R1)+Iadj*R2$$

Since the current from the adjustment terminal (IAdj) represents an error term in the equation, the LM317 was designed to control IAdj to less than 100 μA and keep it constant. To do this, all quiescent operating current is returned to the output terminal. This imposes the requirement for a minimum load current. If the load current is less than this minimum, the output voltage will rise.

Load Regulation

The LM317 can provides excellent load regulation, but a few precautions are needed to achieve maximum performance. For optimal performance, the programming resistor (R1) should be as close to the regulator as possible to reduce the line drop effectively occurring in series with the reference line, thus reducing regulation. The ground end of R2 can be returned to the ground near the load to provide ground remote sensing and improve load regulation.

External Capacitors

A 0.1μF disc or 1.0μF tantalum input bypass capacitor(Cin) is recommended to reduce the sensitivity to input line impedance.

The adjustment terminal may be bypassed to ground to improve ripple rejection. This capacitor (CAdj) prevents ripple from being amplified as the output voltage is increased. A 10μF capacitor should improve ripple rejection about 15dB at 120 Hz in a 10 V application.

Although the LM317 is stable with no output capacitance,like any feedback circuit, certain values of external capacitance can cause excessive ringing. An output capacitance (Cout) in the form of a 1.0μF tantalum or 25μF aluminum electrolytic capacitor on the output swamps this effect and insures stability.

System Examples

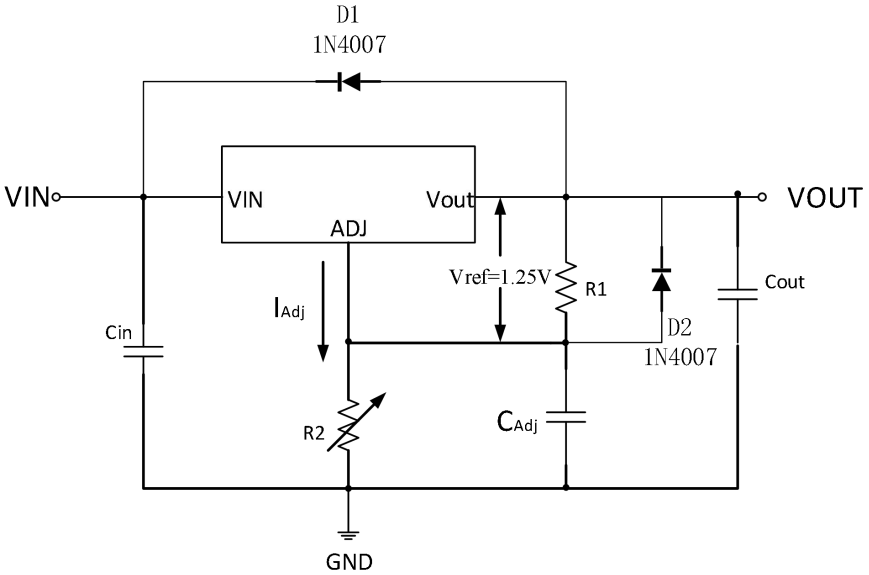

Voltage Regulator with Protection Diodes

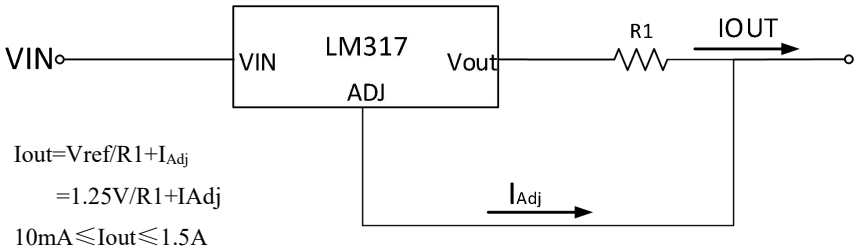

Current Regulator

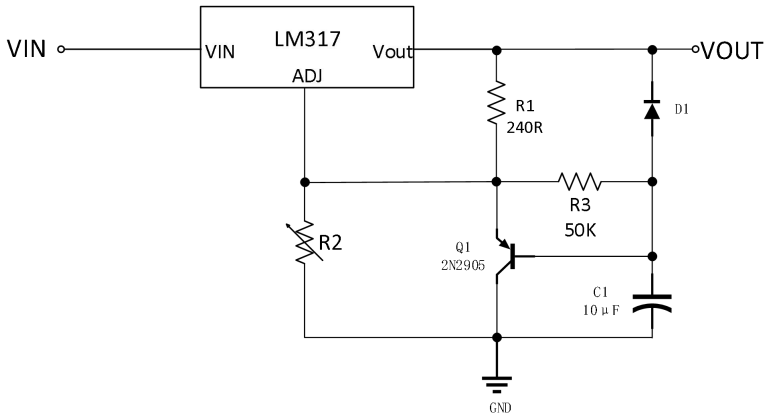

Slow Turn−On Regulator

Typical characteristics

Test Conditions:Vout=5V, CIN=10μF, COUT=10μF,Ta=25°C,unless otherwise indicated.

Input Transient Response

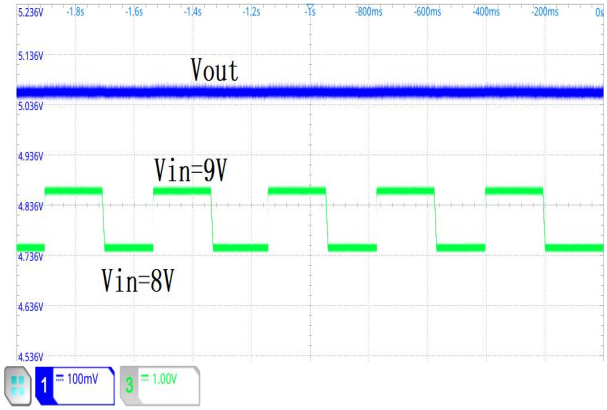

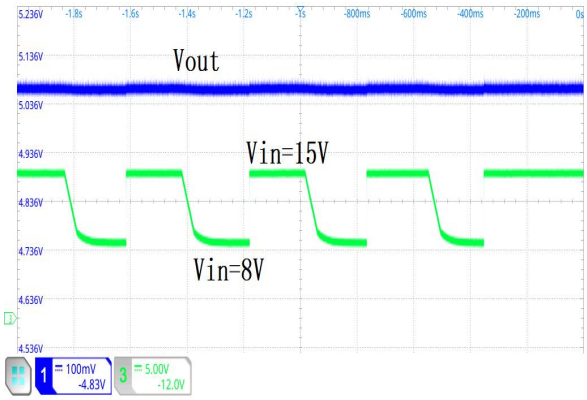

Load Transient Response

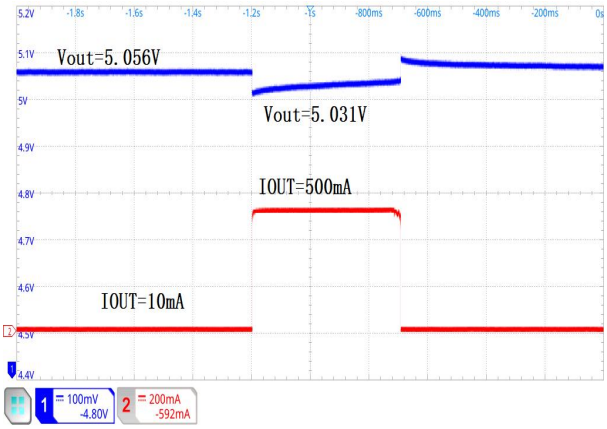

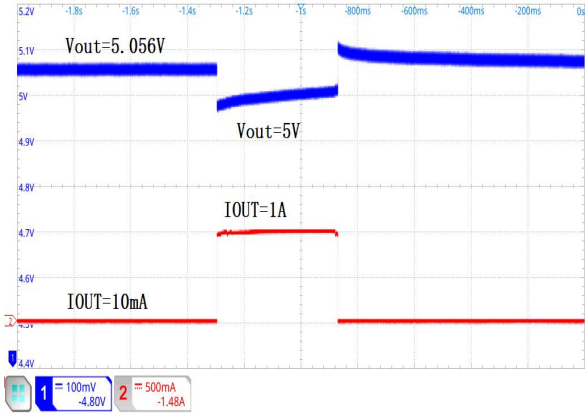

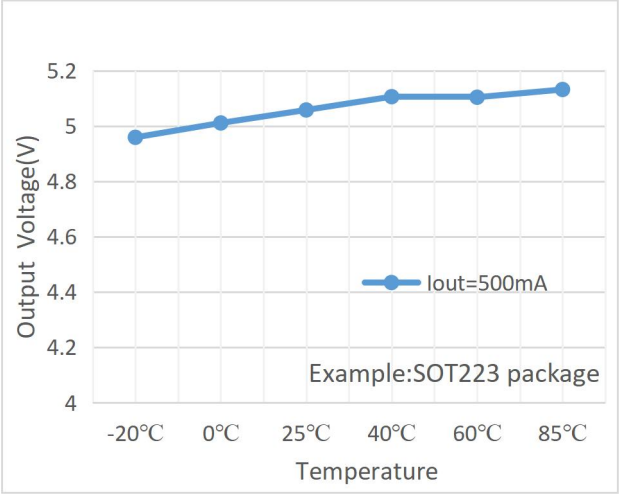

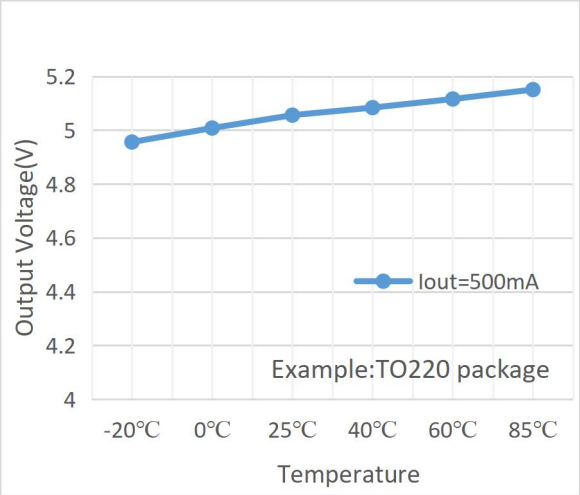

Package Information

SOT223 Package Outline Dimensions

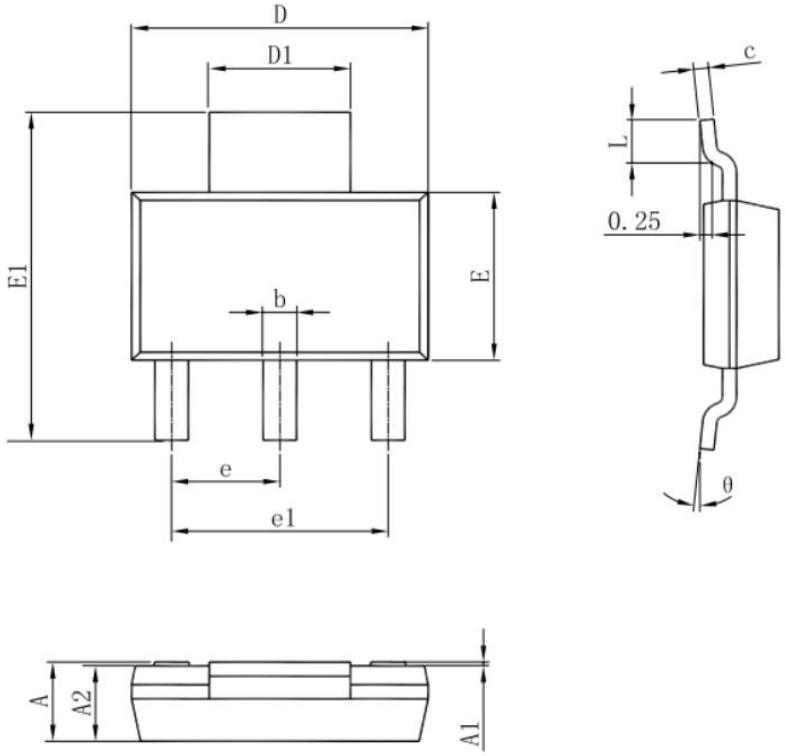

Symbol	Dimensions In Millimeters		Dimensions In Inches	
	Min.	Max.	Min.	Max.
A	1.520	1.800	0.060	0.071
A1	0.000	0.100	0.000	0.004
A2	1.500	1.700	0.059	0.067
b	0.660	0.820	0.026	0.032
c	0.250	0.350	0.010	0.014
D	6.200	6.400	0.244	0.252
D1	2.900	3.100	0.114	0.122
E	3.300	3.700	0.130	0.146
E1	6.830	7.070	0.269	0.278
e	2.300(BSC)		0.091(BSC)	
e1	4.500	4.700	0.177	0.185
L	0.900	1.150	0.035	0.045
θ	0°	10°	0°	10°

TO220 Package Outline Dimensions

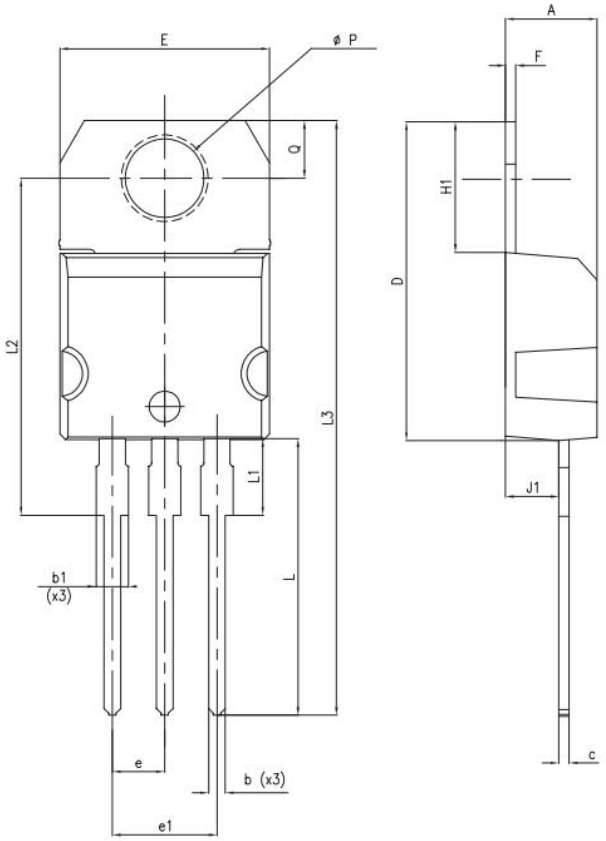

Symbol	Dimensions In Millimeters		
	Min.	Typ.	Max.
A	4.40	-	4.60
b	0.61	-	0.88
b1	1.14	-	1.70
c	0.48	-	0.70
D	15.25	-	15.75
D1	-	-	-
E	10.00	-	10.40
e	2.40	-	2.70
e1	4.95	-	5.15
tF	0.51	-	0.60
H1	6.20	-	6.60
J1	2.40	-	2.72
L	13.00	-	14.00
L1	3.50	-	3.93
L20	-	16.40	-
L30	-	28.90	-
ΦP	3.75	-	3.85
Q	2.65	-	2.95

TO252 Package Outline Dimensions

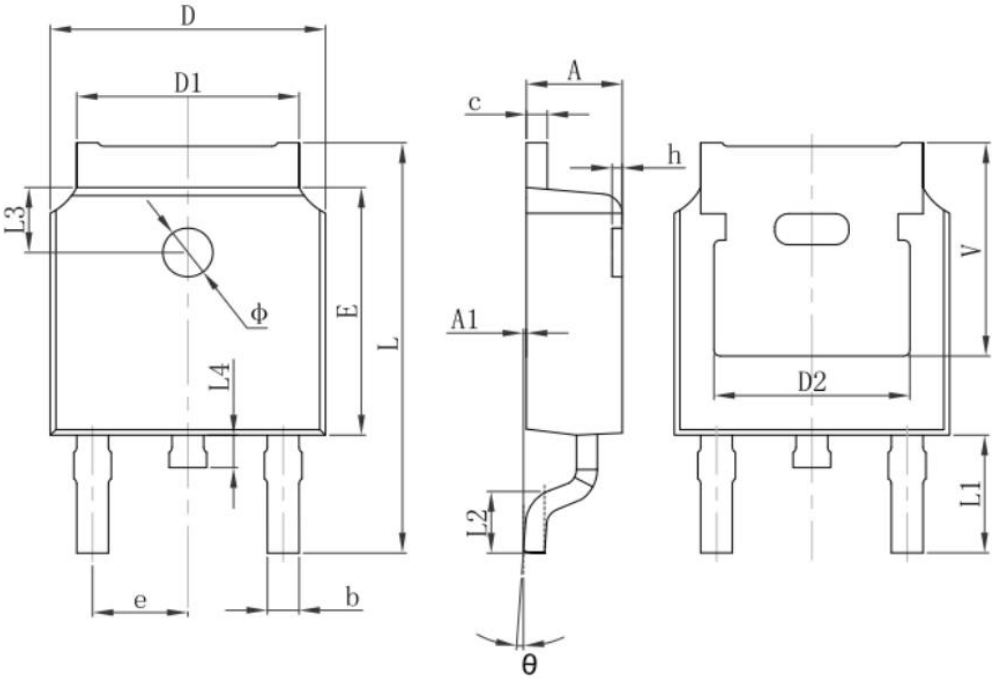

Symbol	Dimensions In Millimeters		Dimensions In Inches	
	Min.	Max.	Min.	Max.
A	2.200	2.400	0.087	0.094
A1	0.000	0.127	0.000	0.005
b	0.660	0.860	0.026	0.034
c	0.460	0.580	0.018	0.023
D	6.500	6.700	0.256	0.264
D1	5.100	5.460	0.201	0.215
D2	4.830 (BSC)		0.190 (BSC)	
E	6.000	6.200	0.236	0.244
e	2.186	2.386	0.086	0.094
L	9.800	10.400	0.386	0.409
L1	2.900 (BSC)		0.114 (BSC)	
L2	1.400	1.700	0.055	0.067
L3	1.600 (BSC)		0.063(BSC)	
L4	0.600	1.000	0.024	0.039
Φ	1.100	1.300	0.043	0.051
θ	0°	8°	0°	8°
h	0.000	0.300	0.000	0.012
V	5.350 (BSC)		0.211 (BSC)	

TO263-2 Package Outline Dimensions

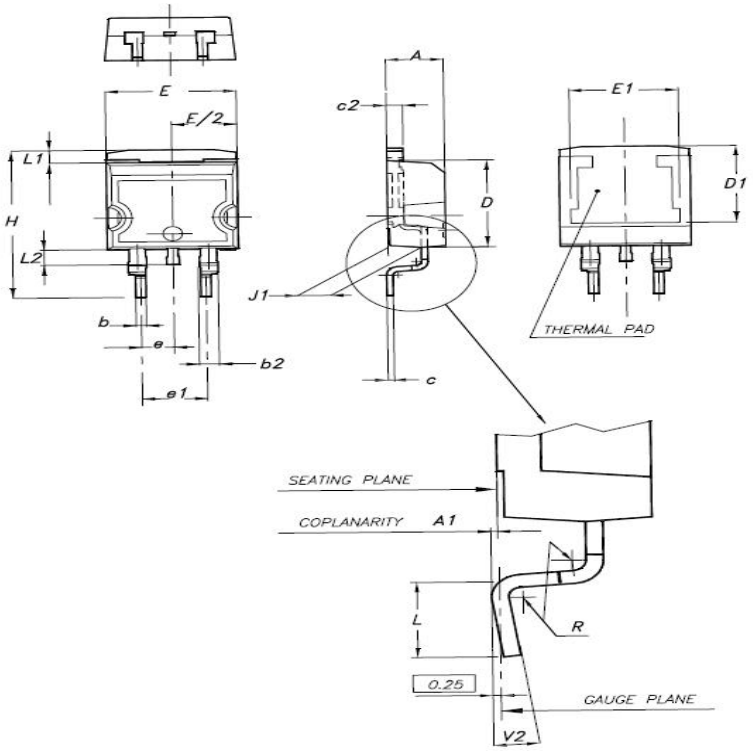

Symbol	Dimensions In Millimeters		
	Min.	Typ.	Max.
A	4.40	-	4.60
A1	0.03	-	0.23
b	0.70	-	0.93
b2	1.14	-	1.70
c	0.45	-	0.60
c2	1.23	-	1.36
D	8.95	-	9.35
D1	7.50	-	-
E	10	-	10.40
E1	8.50	-	-
e	-	2.54	-
e1	4.88	-	5.28
H	15	-	15.85
J1	2.49	-	2.69
L	2.29	-	2.79
L1	1.27	-	1.40
L2	1.30	-	1.75
R	-	0.4	-
V2	0°	-	8°

SOT89-3 Package Outline Dimensions

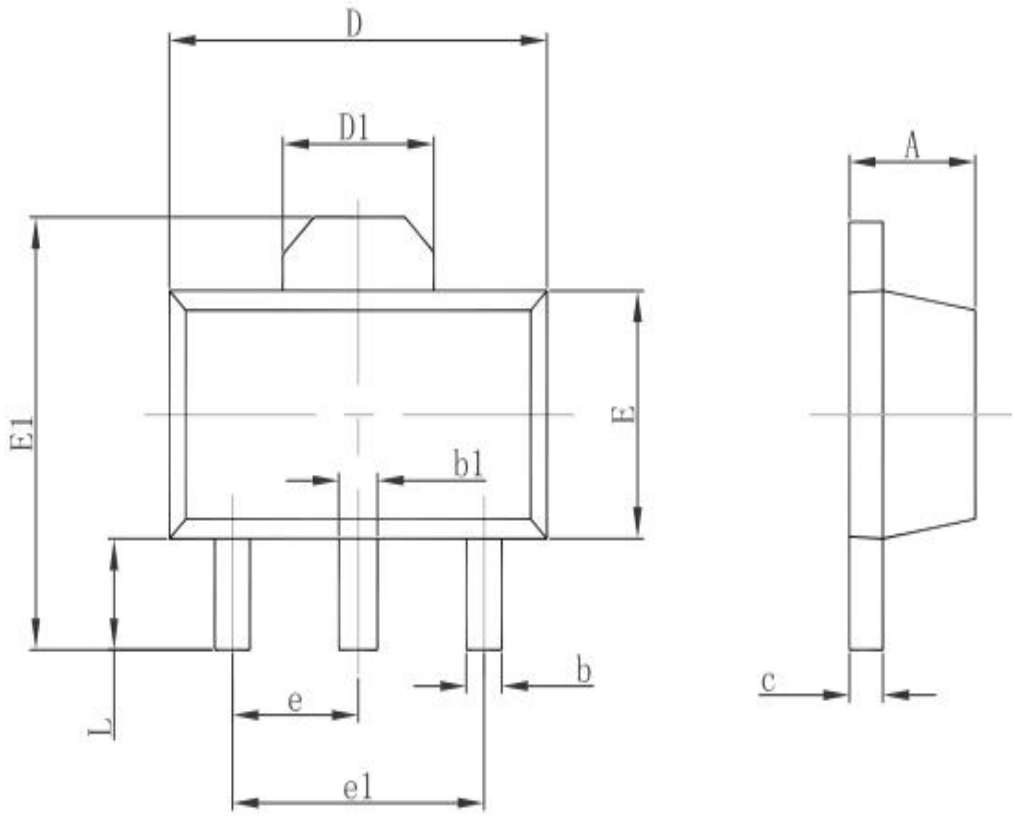

Symbol	Dimensions In Millimeters		Dimensions In Inches	
	Min.	Max.	Min.	Max.
A	1.400	1.600	0.055	0.063
b	0.320	0.520	0.013	0.020
b1	0.400	0.580	0.016	0.023
c	0.350	0.440	0.014	0.017
D	4.400	4.600	0.173	0.181
D1	1.550REF.		0.061REF.	
E	2.300	2.600	0.091	0.102
E1	3.940	4.250	0.155	0.167
e	1.500TYP.		0.060TYP.	
e1	3.000TYP.		0.118TYP.	
L	0.900	1.200	0.035	0.047

Special Version

The company reserves the right of final interpretation of this specification.

Version Change Description

Versions：V1.0 Writer：XinCHun Li Time：2022.11.28

Modify the record：

1. Original Version

Versions：V1.1 Writer：Yang Time：2023.03.30

Modify the record：

1. Add SOT89-3 package

Versions：V1.2 Writer：Yang Time：2024.05.21

Modify the record：

1. Modify the Electrical Characteristics

Statement

The information in the usage specification is correct at the time of publication, Shanghai Siproin Microelectronics Co., Ltd. has the right to change and interpret the specification, and reserves the right to modify the product without prior notice. Users can obtain the latest version information from our official website or other effective channels before confirmation, and verify whether the relevant information is complete and up to date.

With any semiconductor product, there is a certain possibility of failure or failure under certain conditions. The buyer is responsible for complying with safety standards and taking safety measures when using the product for system design and complete machine manufacturing. The product is not authorized to be used as a critical component in life-saving or life-sustaining products or systems, in order to avoid potential failure risks that may cause personal injury or property loss.